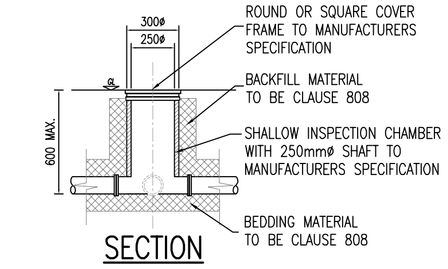

SECTION

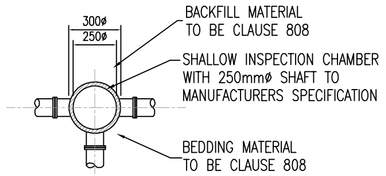

PLAN

CIRCULAR INSPECTION CHAMBER WHERE INVERT IS 0.6m OR LESS BUILDING REGULATIONS TGD SECTION H TABLE 9

SCALE 1:25

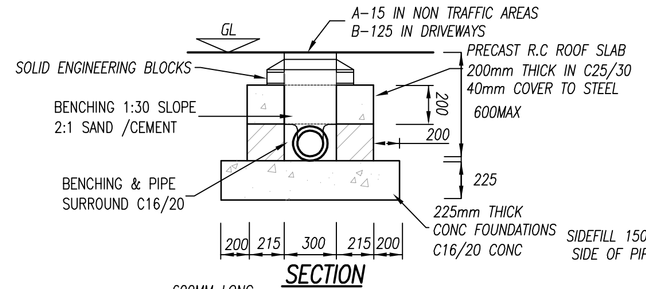

SECTION

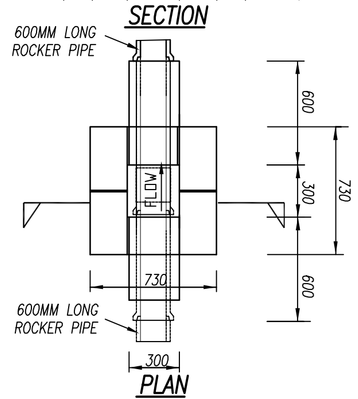

PLAN

INSPECTION CHAMBER WHERE INVERT IS 0.6m OR LESS BUILDING REGULATIONS TGD SECTION H TABLE 9

SCALE 1:25

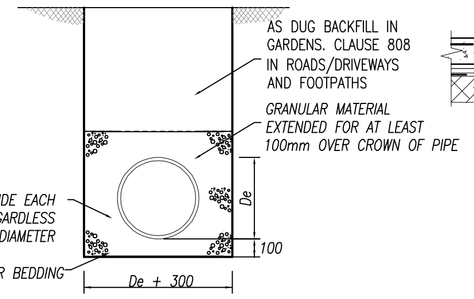

PIPES BEDDED IN GRANULAR MATERIAL
COVER > 0.9m IN ROADS
COVER > 0.6m IN GARDENS

SCALE 1:25

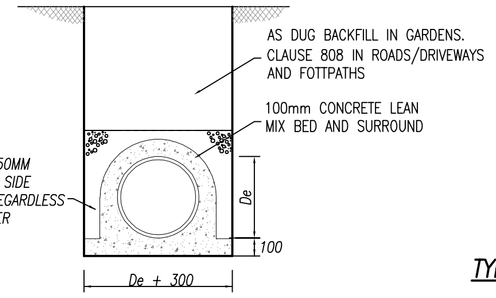

PIPES BEDDED IN CONCRETE
COVER < 0.9m IN ROADS
COVER < 0.6m IN GARDENS

SCALE 1:25

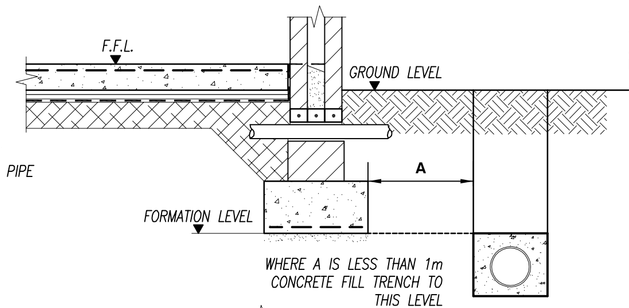

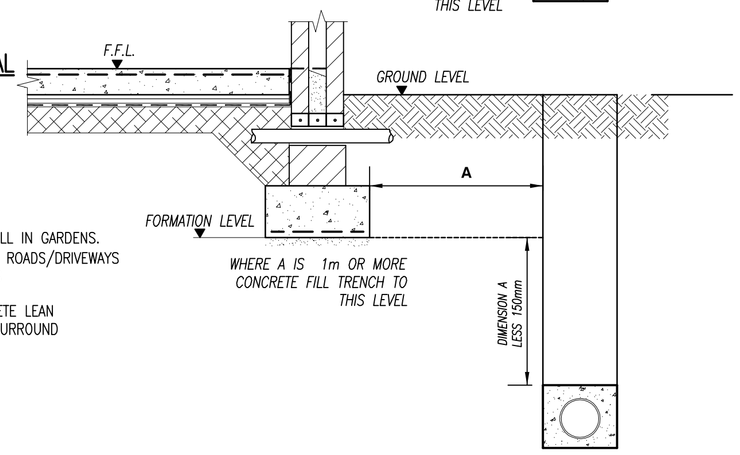

TYPICAL DETAIL WHERE PIPE RUNS NEAR BUILDINGS

SCALE 1:25

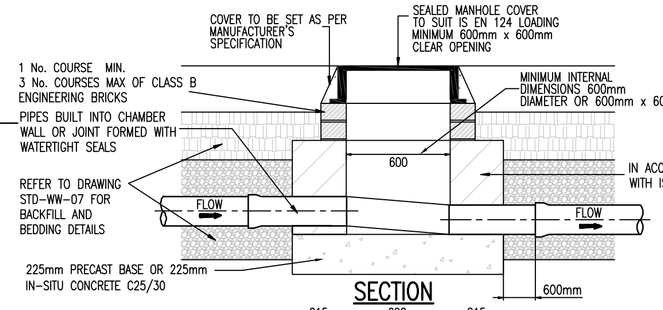

SECTION

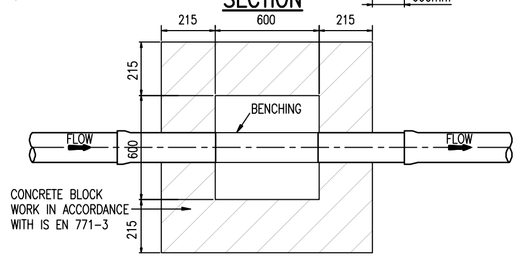

FLOOR PLAN INSPECTION CHAMBER (BLOCK WORK CONSTRUCTION)

N.T.S

1. ALL DIMENSIONS ARE IN MILLIMETRES (mm) UNLESS NOTED OTHERWISE.
2. AN INSPECTION CHAMBER SHOULD BE LOCATED AT OR WITHIN 1m OF THE PROPERTY BOUNDARY AT THE UPSTREAM END OF EACH SERVICE CONNECTION ON THE PRIVATE SIDE OF THE CURTILAGE, IF PRACTICABLE.
3. ANY PIPE AND ASSOCIATED ACCESS UPSTREAM OF THE POINT OF CONNECTION TO A PUBLIC SEWER IS A PRIVATE DRAIN AND SHOULD BE CONSTRUCTED IN ACCORDANCE WITH THE BUILDING REGULATIONS.
4. ACCESS POINTS SHOULD BE LOCATED SO THAT THEY ARE ACCESSIBLE AND APPARENT TO THE MAINTAINER AT ALL TIMES FOR USE. THEY SHOULD AVOID REAR GARDENS OR ENCLOSED LOCATIONS AND THEY SHOULD NEVER BE OVERLAIN WITH SURFACE DRESSING, TOPSOIL, ETC.
5. COVERS AND FRAMES SHALL BE SUITABLE FOR ROAD AND TRAFFIC CONDITIONS SUBJECT TO APPROVAL FROM IRISH WATER.
6. 200mm ALL AROUND, 100mm DEEP CONCRETE PLINTH WITH PROTECTIVE STAINLESS STEEL METAL BAND AROUND COVERS IN GREEN AREAS.
7. PROPRIETARY PREFABRICATED CHAMBER UNITS MAY ALSO BE USED, SUBJECT TO APPROVAL FROM IRISH WATER.
8. CONCRETE CHAMBERS SHALL BE SURROUNDED BY A MINIMUM OF 150mm COMPACTED CLAUSE 804 MATERIAL AS PER STD-WW-07.
9. ALL CHAMBERS TO BE CHECKED FOR UPLIFT BY THE DEVELOPER BASED ON GROUND CONDITIONS WITHIN THE SITE. SHOULD ANTI FLOATATION MEASURES BE REQUIRED THEY SHALL BE SUBJECT TO APPROVAL FROM IRISH WATER.

NOTES:

1. DO NOT SCALE. USE FIGURED DIMENSIONS ONLY.
2. THIS DRAWING IS TO BE READ IN CONJUNCTION WITH ALL OTHER RELEVANT ARCHITECTURAL AND ENGINEERING DRAWINGS.
3. TYPE A GRANULAR FILL SHALL CONSIST OF WASHED PEA GRAVEL. ALL MATERIAL SHALL PASS A 19mm B.S. SIEVE TEST AND SHALL BE RETAINED BY A 4.75mm B.S. SIEVE TEST.
4. SELECTED FILL SHALL BE FREE FROM STONES GREATER THAN 25mm IN SIZE, BUILDERS RUBBLE VEGETABLE MATTER AND LUMPS OF CLAY GREATER THAN 75mm IN SIZE AND SHALL BE COMPACTED IN 150mm LAYERS.
5. IN OPEN SPACES BACKFILL SHALL CONSIST OF SUITABLE SELECTED EXCAVATED MATERIAL. UNDER PAVED AREAS BACKFILL SHALL CONSIST OF SUITABLE APPROVED GRANULAR FILL. GENERAL BACKFILL SHALL BE COMPACTED IN LAYERS NOT EXCEEDING 300mm THICK.
6. CONCRETE BED AND SURROUND SHALL BE USED ON ALL PIPES WHERE COVER TO THE SOFFIT OF THE PIPE IS LESS THAN 1.2m IN ROADS, FOOTPATHS AND GRASS MARGINS AND 0.9m IN OPEN SPACES AND FIELDS.
7. ALL CONCRETE FOR PIPE BEDDING, HAUNCHING AND SURROUNDS SHALL BE GRADE 20N/20.
8. ALL MANHOLES SHALL BE WATERTIGHT TO THE SATISFACTION OF THE ENGINEER.
9. FORMWORK TO REINFORCED CONCRETE AND MASS CONCRETE SHALL BE CLASS F2.
10. CLASS U2 FINISH TO THE TOP OF SLABS. REINFORCEMENT TO SLABS TO ENGINEERS DETAILS.
11. 200mm THICK CL. 30/20 MASS CONCRETE FOUNDATIONS. 225mm THICK PRECAST R.C. ROOF SLAB IN CL 30/20 CONCRETE. COVER TO STEEL TO BE 40mm.
12. TOE HOLES TO BE PROVIDED IN BENCHING OF SEWERS GREATER THAN 450mm DIAMETER FOR ACCESS TO INVERT. SAFETY CHAIN ON SEWERS 600mm. DIA. OR GREATER MILD STEEL SAFETY CHAIN SHALL BE 10MM. NOMINAL SIZE GRADE M(H) NON CALIBRATED CHAIN, TYPE 1, COMPLYING WITH BS4942 PART 2.
13. WHEN DEPTH OF MANHOLES TO INVERT IS GREATER THAN 3.5m, LADDERS SHALL BE USED INSTEAD OF RUNGS. FIXED LADDERS SHOULD MEET THE DIMENSIONAL REQUIREMENTS OF BS4211 EXCEPT THAT STRINGERS SHOULD NOT BE LESS THAN 65 X 20mm IN SECTION AND RUNGS 25mm IN DIAMETER.
14. LADDER STRINGERS SHOULD BE ADEQUATELY SUPPORTED FROM THE MANHOLE WALL AT INTERVALS OF NOT MORE THAN 3.0m STRINGERS SHOULD BE BOLTED TO CLEATS TO FACILITATE RENEWAL.
15. ALL LADDERS, RUNGS, HANDRAILS, SAFETY CHAIN, ETC. SHALL BE HOT DIPPED GALVANISED TO BS729.
16. ALL SURFACE WATER WORKS TO BE CARRIED OUT IN ACCORDANCE TO FINGAL COUNTY COUNCIL REQUIREMENTS. ALL FOUL WATER WORKS TO BE CARRIED OUT IN ACCORDANCE TO IRISH WATER REQUIREMENTS.
17. ACCESS JUNCTIONS TO BE USED AT DEPTHS OF 600mm OR LESS. INSPECTION CHAMBERS TO BE USED BETWEEN DEPTHS OF 600mm AND 1m. ALL WORKS IN ACCORDANCE WITHE THE BUILDING REGULATIONS TECHNICAL GUIDANCE DOCUMENT – CURRENT VERSION & WITH IRISH WATER STANDARD DETAILS. MIN COVER REQUIREMENTS IN ACCORDANCE WITH THE BUILDING REGULATIONS TGD SECTION H. REFER TO TABLES 8 AND 9 FOR COVER AND ACCESS CHAMBER REQUIREMENTS.
18. ALL MANHOLE AND CHAMBER COVERS IN TRAFFICKED AREAS INCLUDING CARPARKS, TO BE TRAFFICABLE.
19. MANHOLE CHAMBERS >1.5m DEEP – USE 1200ø PRECAST CONCRETE SYSTEM MANHOLE CHAMBERS >1.0m DEEP – USE 1050ø PRECAST CONCRETE SYSTEM MANHOLE CHAMBERS >0.6m DEEP – USE 450ø WAVIN CHAMBERS OR SIMILAR APPROVED MANHOLE CHAMBERS <0.6m DEEP – USE 300ø WAVIN AJ CHAMBERS OR SIMILAR APPROVED BEDDING SURROUND – USE 10mm PEA GRAVEL

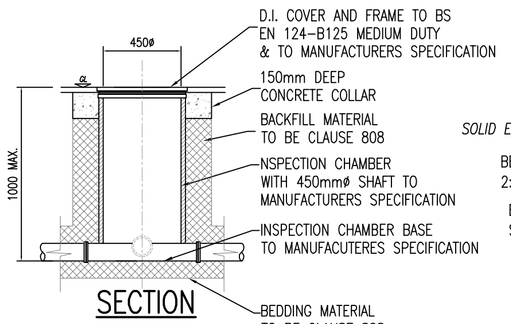

SECTION

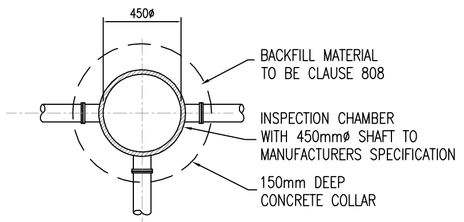

PLAN

CIRCULAR INSPECTION CHAMBER WHERE INVERT IS 1m OR LESS BUILDING REGULATIONS TGD SECTION H TABLE 9

SCALE 1:25

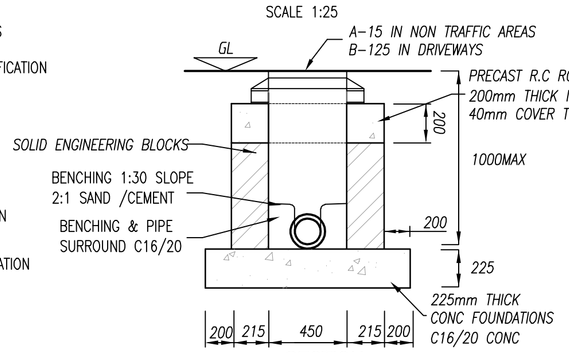

SECTION

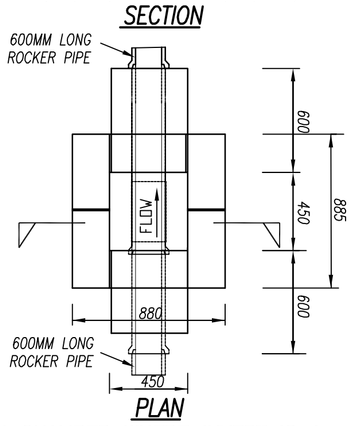

PLAN

INSPECTION CHAMBER WHERE INVERT IS 1m OR LESS BUILDING REGULATIONS TGD SECTION H TABLE 9

SCALE 1:25

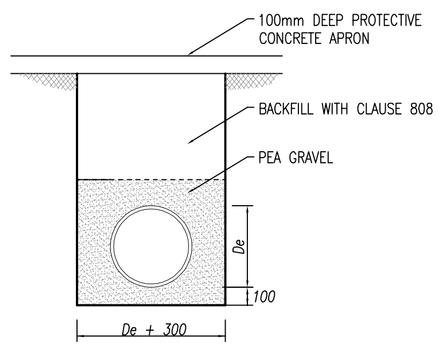

PIPES BEDDING ALTERNATIVE DETAIL
COVER < 0.9m IN ROADS
COVER < 0.6m IN GARDENS

SCALE 1:25

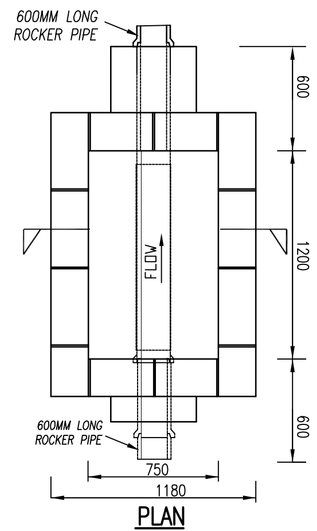

PLAN

SCALE 1:25

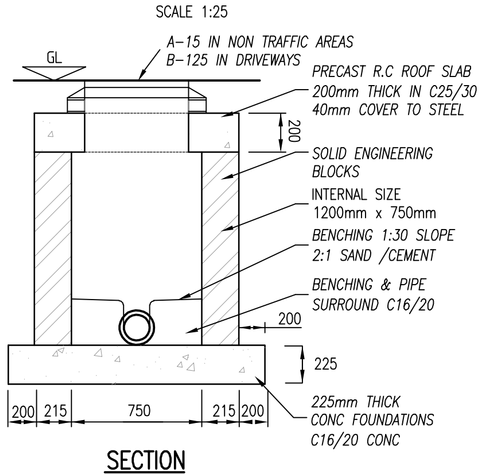

SECTION

MANHOLE DEPTH TO INVERT IS BETWEEN 1m AND 2.7m BUILDING REGULATIONS TGD SECTION H TABLE 9

SCALE 1:25

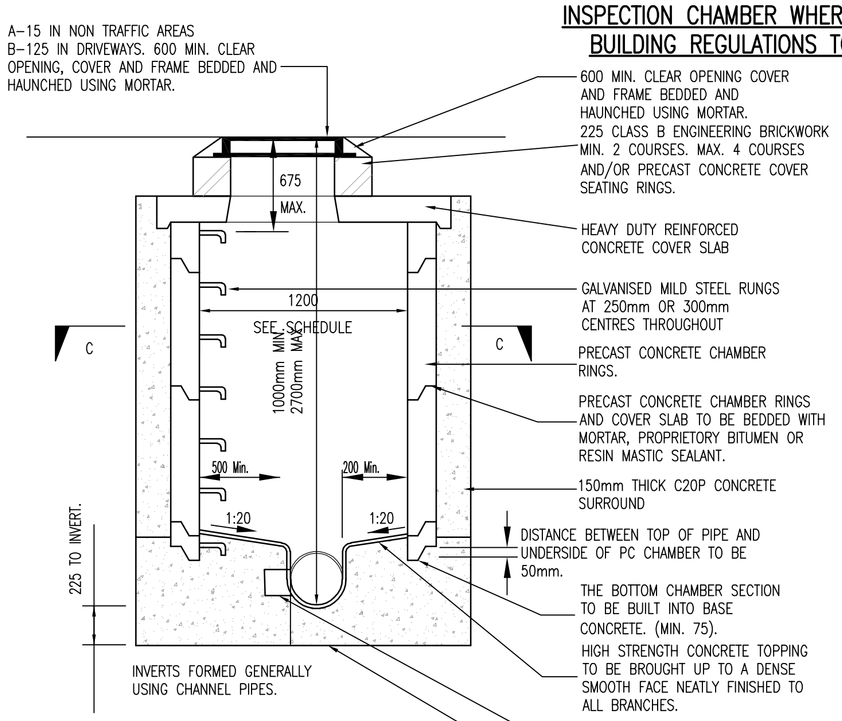

CIRCULAR MANHOLE WHERE INVERT IS BETWEEN 1m AND 2.7m BUILDING REGULATIONS TGD SECTION H TABLE 9

SCALE 1:25

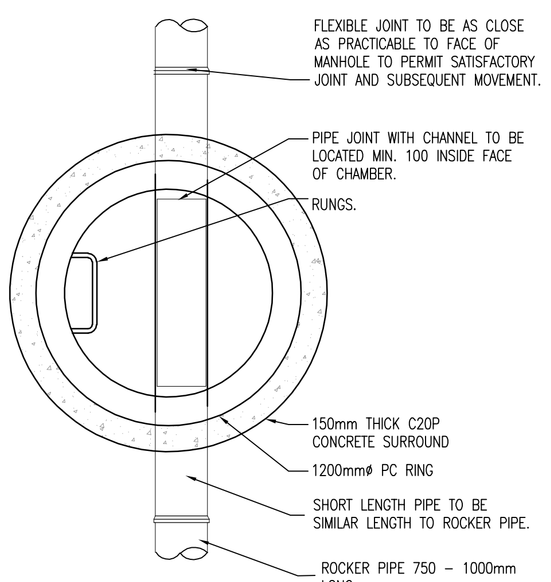

SECTION C–C

SCALE 1:25

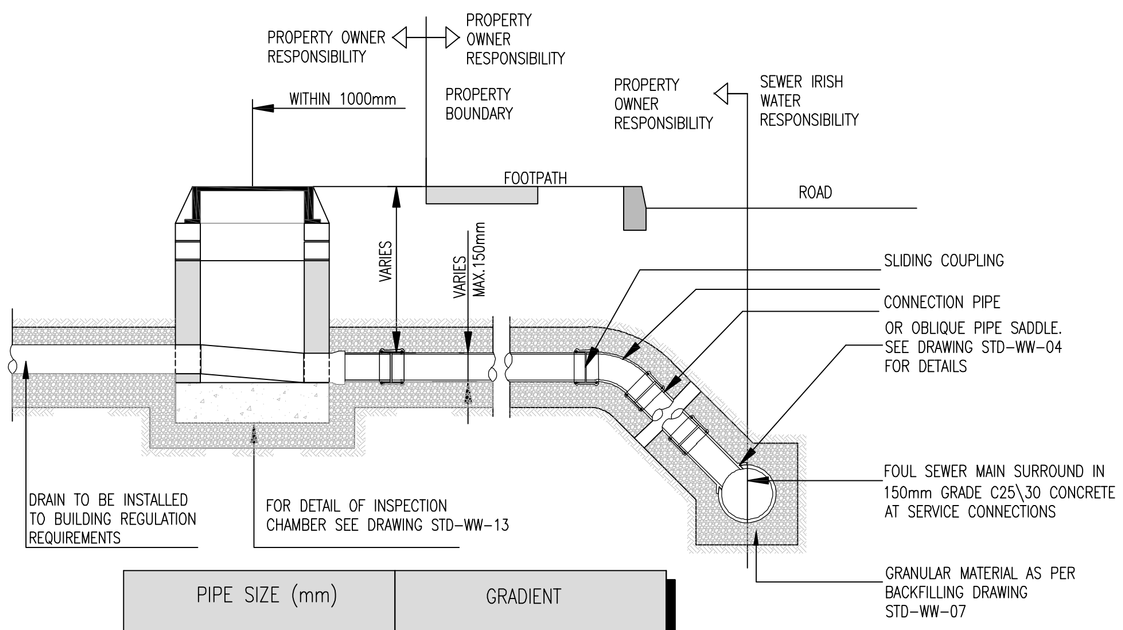

PIPE SIZE (mm)	GRADIENT
100	1 : 60
150 TO 225	1 : 150 MINIMUM

PRIVATE DRAIN AND SERVICE CONNECTION PIPEWORK

N.T.S

1:25 0 0.5 1.0 1.5 2.0 2.5m

1:1 0 10 20 30 40 50 60 70 80 90 100m

REV.	DATE	AMENDMENT	DRN	APPD
A	12/08/19	REVISED FOR FINAL SUBMISSION	PJD	MD

STATUS **FOR PLANNING NOT FOR CONSTRUCTION**

Waterman Moylan
Engineering Consultants
BLOCK S, EASTPOINT BUSINESS PARK, ALFIE BYRNE ROAD, DUBLIN D03 H3F4
Tel: (01) 664 8900 Fax: (01) 661 3618
Email: info@waterman-moylan.ie www.waterman-moylan.ie

CLIENT GERARD GANNON PROPERTIES

ARCHITECT CONROY CROWE KELLY

PROJECT CLONGRIFFIN SHD APPLICATION 2

TITLE TYPICAL PRIVATE DRAINAGE CONSTRUCTION DETAILS

DRAWN	DESIGNED	APPROVED	DATE
PJD	PJD	MD	NOV 18'
SCALE	JOB NO.	DRG. NO.	REVISION
1:25 @ A1	18-059	P2212	A

© 2015. This drawing is copyright. No part of this document may be re-produced or transmitted in any form or stored in any retrieval system of any nature without the written permission of the consulting engineer as copyright holder except as agreed for use on the project for which the document was originally issued.